HXR

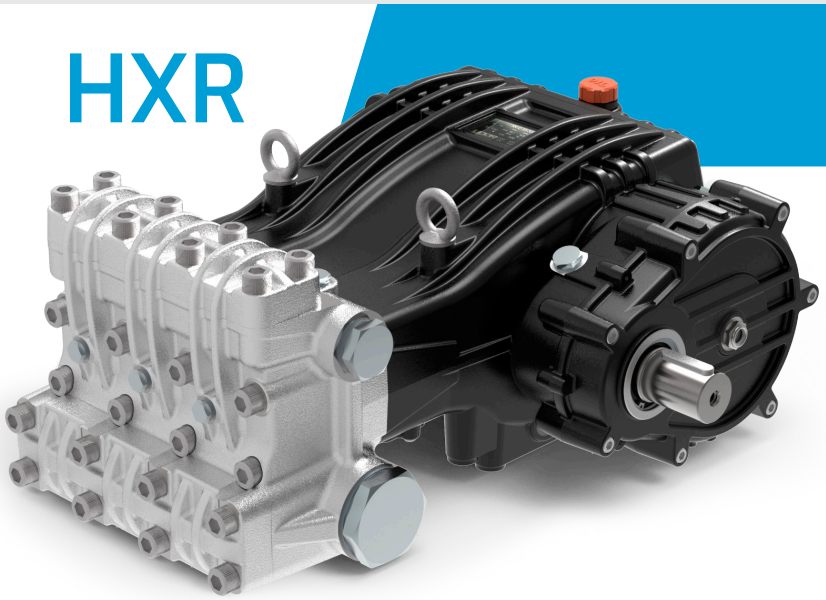

A richiesta, alcuni modelli HX sono disponibili con speciali tenute (GW) per acqua riciclata.

Upon request, some HX models are available with special seals (GW) for grey/recycled water.

RPM	CODICE *CODE*	MODELLO *MODEL*	PORTATA *FLOW*				PRESSIONE *PRESSURE*		POTENZA *POWER*		PESO *WEIGHT*	PRESA DI FORZA *SHAFT TYPE*
			NOM.									
			l/min	GPM	l/min	GPM	bar	PSI	HP	kW	Kg	
1500	317600	HXR1-C 135/300 R	135.1	35.7	124.5	32.9	300	4350	95.8	71.4	182.0	R - Albero MASCHIO 50 mm DX *R - MALE Shaft 50 mm RIGHT*
	317300	HXR1-C 160/240 R	171.0	45.2	162.5	42.9	240	3480	100.0	74.5	182.0	
	830007	HXR1-C 210/200 R	211.1	55.8	206.0	54.4	200	2900	105.7	78.8	182.0	
	830018	HXR1-C 270/160 R	267.2	70.6	260.0	68.7	160	2320	106.8	79.6	182.0	
	316400	HXR1-C 330/130 R	330.0	87.2	326.0	86.1	130	1885	108.7	81.1	182.0	
	317900	HXR1-C 400/100 R	400.0	105.7	395.1	104.4	100	1450	101.3	75.5	182.0	
1800	317700	HXR1-D 135/300 R	135.1	35.7	124.5	32.9	300	4350	95.8	71.4	182.0	
	317400	HXR1-D 160/240 R	171.0	45.2	162.5	42.9	240	3480	100.0	74.5	182.0	
	830009	HXR1-D 210/200 R	211.1	55.8	206.0	54.4	200	2900	105.7	78.8	182.0	
	830020	HXR1-D 270/160 R	267.2	70.6	260.0	68.7	160	2320	106.8	79.6	182.0	
	316500	HXR1-D 330/130 R	330.0	87.2	326.0	86.1	130	1885	108.7	81.1	182.0	
	316200	HXR1-D 400/100 R	400.0	105.7	395.1	104.4	100	1450	101.3	75.5	182.0	
2200	317500	HXR1-M 135/300 R	135.1	35.7	124.5	32.9	300	4350	95.8	71.4	182.0	
	317200	HXR1-M 160/240 R	171.0	45.2	162.5	42.9	240	3480	100.0	74.5	182.0	
	830011	HXR1-M 210/200 R	211.1	55.8	206.0	54.4	200	2900	105.7	78.8	182.0	
	830022	HXR1-M 270/160 R	267.2	70.6	260.0	68.7	160	2320	106.8	79.6	182.0	
	316300	HXR1-M 330/130 R	330.0	87.2	326.0	86.1	130	1885	108.7	81.1	182.0	
	316000	HXR1-M 400/100 R	400.0	105.7	395.1	104.4	100	1450	101.3	75.5	182.0	

Tutti i modelli di POMPE sono disponibili con Presa di Forza Sinistra (L). Esempio : HXR1-C 135/300 L

All models of PUMPS are available with Left P.T.O. Shaft (L). Example : HXR1-C 135/300 L

Dimensioni d'ingombro (mm) - *Overall Dimensions (mm)*

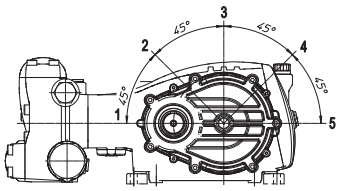

In base alle esigenze dell'istallatore, il Riduttore può essere installato nelle cinque posizioni 1,2,3,4,5 come illustrato.
Esempio d'ordine: HXR1-C 135/300 R diventa HXR2-C 135/300 R.
Per informazione su prezzi e codici per favore contattare l'azienda.

Depending on specific needs, the Gearbox can be mounted in five different Positions 1,2,3,4,5 as shown in the following picture.
For example: HXR1-C 135/300 R becomes HXR2-C 135/300 R.
For price and code information please contact us.

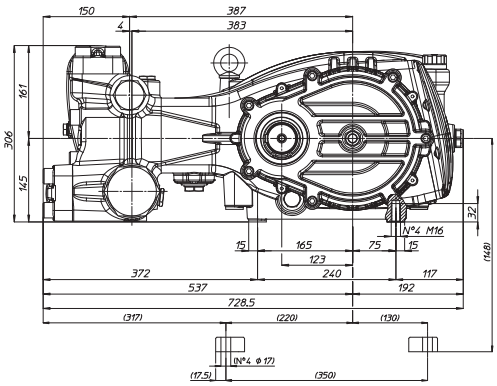

	INLET	OUTLET
135/300 R	G 2"	G 1"
160/240 R	G 2"	G 1"

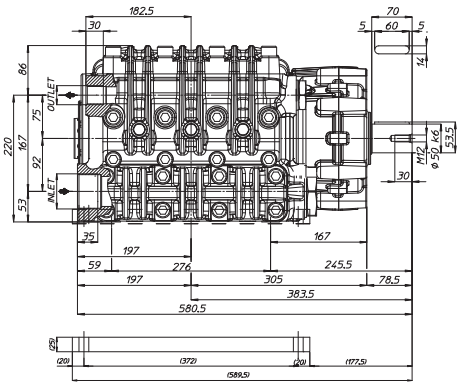

	INLET	OUTLET
210/200 R	G 2" 1/2	G 1" 1/4
270/160 R	G 2" 1/2	G 1" 1/4
330/130 R	G 2" 1/2	G 1" 1/4
400/100 R	G 2" 1/2	G 1" 1/4