GAMMA 6P

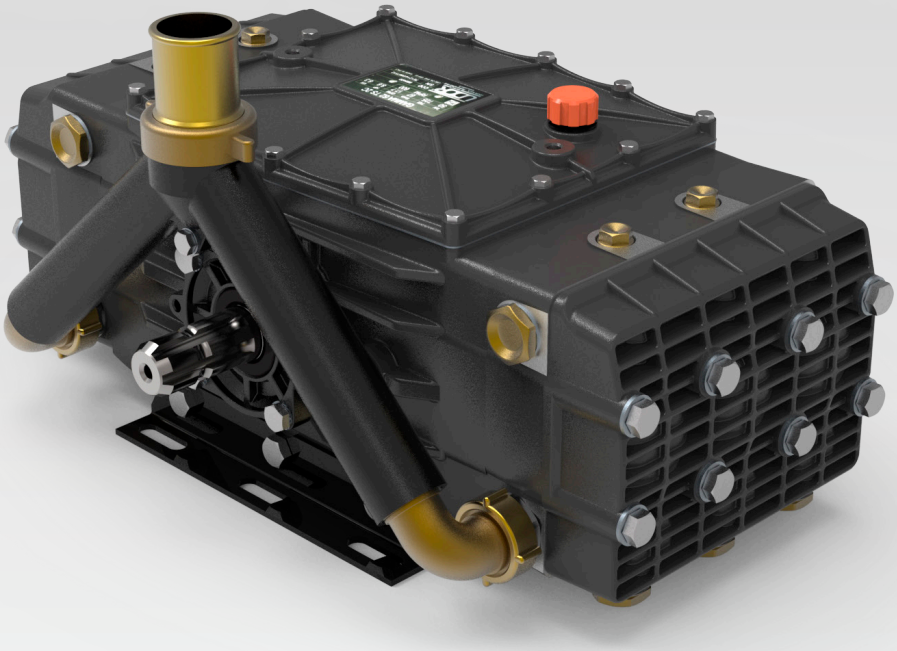

TS 1C

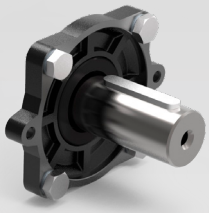

TS 2C

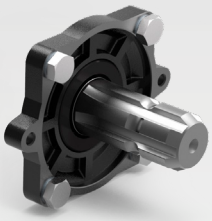

RPM	CODICE *CODE*	MODELLO *MODEL*	PORTATA *FLOW*				PRESSIONE *PRESSURE*		POTENZA *POWER*		PESO *WEIGHT*	PRESA DI FORZA *SHAFT TYPE*
			NOM.									
			l/min	GPM	l/min	GPM	bar	PSI	HP	kW	Kg	
600	839700	GAMMA 162 TS 1C	169.7	44.8	164.0	43.3	60	870	25.2	18.8	52.0	TS 1C – 35 mm 1"3/8 Scanalato / *Splined*
	839600	GAMMA 162 TS 2C	169.7	44.8	164.0	43.3	60	870	25.2	18.8	52.0	
	837200	GAMMA 202 TS 1C	214.9	56.8	208.0	55.0	60	870	32.0	23.9	52.0	
	837100	GAMMA 202 TS 2C	214.9	56.8	208.0	55.0	60	870	32.0	23.9	52.0	TS 2C – 1"3/8 Scanalato / *Splined* 1"3/8 Scanalato / *Splined*
550	840200	GAMMA 242 TS 1C	246.2	65.1	240.0	63.4	60	870	36.9	27.5	52.0	
	840100	GAMMA 242 TS 2C	246.2	65.1	240.0	63.4	60	870	36.9	27.5	52.0	

Dimensioni d'ingombro (mm) - *Overall Dimensions (mm)*

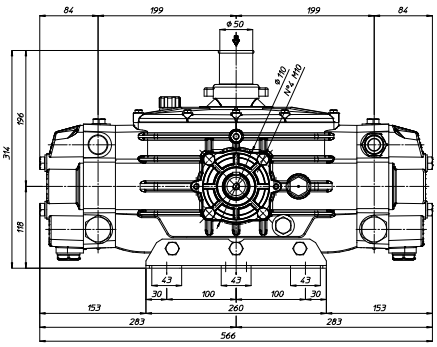

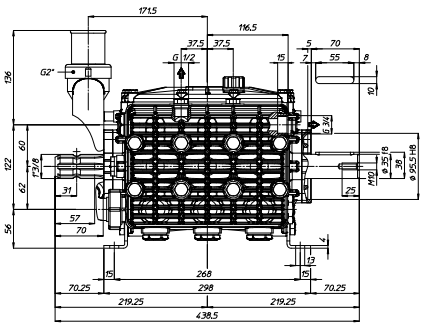

TS 1C

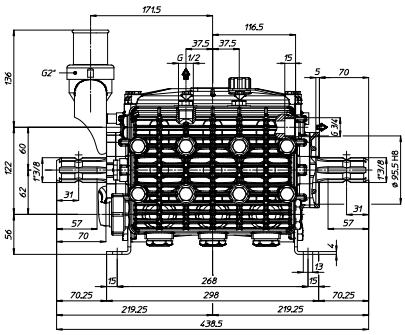

TS 2C